TRIPLE R BYPASS OIL CLEANER

Intruction manual for BU-SERIES

Triple R Model BU30E
Triple R Model BU50E
Triple R Model BU100E

DAILY MAINTENANCE PRECAUTIONS

After installation, the BU Series needs no particular care except periodic replacement of the element. But please check for oil leaks once in a while.

■ Expendables :

The element, rubber packing and bonded seal comprise the expendables. The required quantity must be made readily available in the warehouse. The elements are vulnerable to humidity. Therefore, even though they are contained in vacuum wrapping, storage in a damp environment should be avoided as far as possible.

■ Stop Valve :

Immediately close the stop valve if you find the oil cleaner is leaking. The oil line to the cleaner then becomes a closed circuit. Use of the stop valve is optional for the BU Series as it allows for replacement of the element while the machine is in operation. The valve is of the external installation type and attached immediately downstream of the machine's oil outlet.

ELEMENT REPLACEMENT CRITERION

Proper replacement of the Triple R Oil Cleaner element is one of the most important factors in keeping the oil clean. Please follow the maintenance procedure as illustrated below.

The frequency of replacement varies somewhat depending on the age of the applicable machines, the work environment, the grade of oil to be filtered, etc.

The element should be replaced one month after installation or after being used for about 500 hours, and thereafter it should be replaced ideally at intervals of 1500 hours or 2000 hours maximum. It must be replaced every 6 months no matter how little it has been used.

Pressure gauge provided on the cleaner is for monitoring the timing for replacing the element. But as there can be some error in what it indicates due to the cleaner's pressure, oil temperature, viscosity, flow resistance, etc., this should be taken as a guide line only.

The element should be replaced even before work starts as mentioned above, however, if the reading is at the upper limit of the red zone (equal to or greater then 0.5Mpa)

Extreme low pressure measured during the operation indicates entrainment of water and which can cause cracks to oocure. Investigate the cause of the water ingress, take remedial action, and replace the element after inspection. The WE100 filter element for absorbing water is available. Please contact our sales agents.

Immediately after starting operation, the pressure gauge reading sometimes rises above 0.5Mpa, but this gradually goes down after the oil temperature rise. In case the pressure still exceeds 0.5Mpa after the temperature rise, please contact our sales agents.

ELEMENT REPLACEMENT

1. Close the Stop valve to shut of the filter from the high pressure line and check that the pressure gauge indicates „0Mpa".

2. Unthighten the T-bold (turn to the left), and remove the lid and the rubber seal and o-ring.

3. Cover the filter housing with the plastic bag that comes with every new eleement, and pull out the element by the two vinyl straps.

4. Use a clean cloth to clean the inside of the housing and remove reidual dirt like solid particles or sludge if necessary.

5. Insert a new filter element, with the vinyl straps facing to the upper side. Push the element into the housing untill it fits perfectly inside the housing.

6. Place the U-shaped rubber seal on the housing edge. In case od an O-Ring be sure it fits perfectly inside the lid.

7. Put he lid on top of the housing, check that the rubber seal fits properly replace the T-bold and thighten firmly (turn to the right). Open the Stop valve to allow connection to the high pressure line.

SPECIFICATIONS

Model	BU30E	BU50E	BU100E
Art.nr. 230V/400V	TR-19450	TR-19650	TR-19530
Flow	1,0 l/m	1,5 l/m	2,0 l/m
Element Type	M30	M50	M100, D100, WE100
Max ΔP	4,5 bar ΔP		
Weight kg	2,5	4,0	6,5
Dimensions	140x122x285	184x166x310	230x206x320
In/Out thread			

FILTER SELECTION: based on the oil volume

Oil volume in lit:	300	500	1.000
BU30E	→		
BU50E		→	
BU100E			→

Above data is meant for maschines running on 46cSt oil and with a normal oil contamination level. The appicable range can shift depending on the machine type, the oil type and the general contamination situation.

Please contact your local distributor in case of other fluids than mineral oil, different viscosity or other specific situations.

TROUBLE SHOOTING

💣 Defect	☹ Cause	☺ Repair
💣 Pressure gauge does not work (0-indication).	☹ Stop valve on the inlet side is closed. ☹ A considerable amount of water is mixed in, which leads to cracking of the element. ☹ Pressure gauge is damaged.	☺ Fully open the Stopp valve. ☺ Investigate the cause of the water mixture and replace the defective element with a new one after removing the water. - Water absorbing element is available. ☺ Replace it with a new pressure gauge.
💣 Pressure gauge reading rises above 0.5Mpa	☹ Clogged element. ☹ Excessive back pressure..	☺ Replace the element.at 0,45MPa. ☺ Shorten the length (shorter than 1,5m) and enlarge the diameter of the hose or pipe at the oil returning side.
💣 Oil leakage	☹ Loose piping joint. ☹ Deterioration/fatigue of U-packing and/or bonded seal.	☺ Tighten the piping joint. ☺ Replace with new seal or packing.
💣 Oil remains dirty.	☹ No element in the housing. ☹ Element does not contact the bottom edge. ☹ Element is cracked ☹ Clogged element.	☺ Insert an element. ☺ Complete push the element into the housing. ☺ Investigate the cause of the water mixture and replace the defective element with a new one after removing the water. - use the water absorbing element WE100. ☺ Replace the element.

BU30E

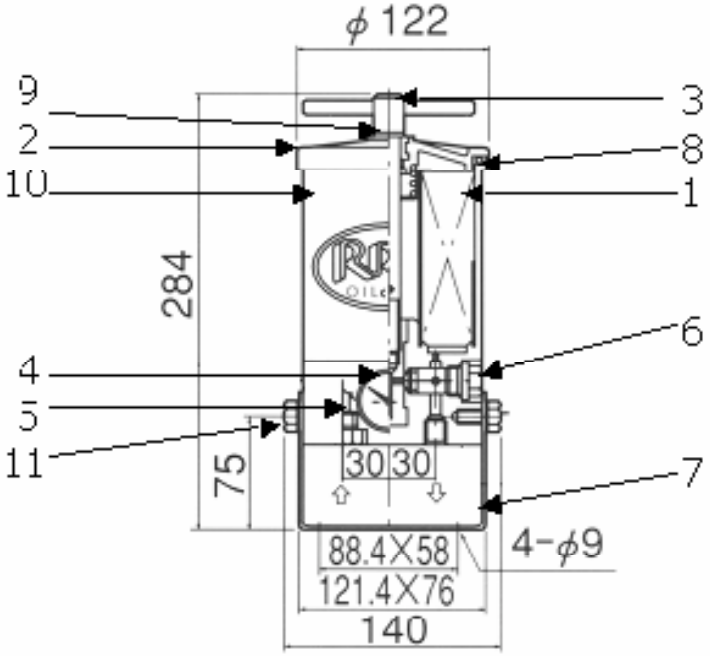

Article number	**TR-19450**
Flow	1,0 lit/min
Thread	BSPT 1/4”
Application	For machines up to max. 300 lit. oil volume
Standard Filter element	M30 (TR-20230)
Option	Pressure switch NC 4,5 bar

Nr.	**Article number**	**Description**
1	TR-20230	Filter element (M30)
2	TR–45427	Lid
3	TR–45325	T-bold
4	TR–49800	Pressure gauge
5	TR–44512	Flow control valve set at 1,0 lit/min
6	TR–41520	Pressure relief valve
7	TR–45126	Bracket
8	TR–44021	O-packing for lid *
9	TR–44112	Bonded seal at T-bold *
10	Triple R Filter housing	
11	TR-45625	Set of bolds

BU50E

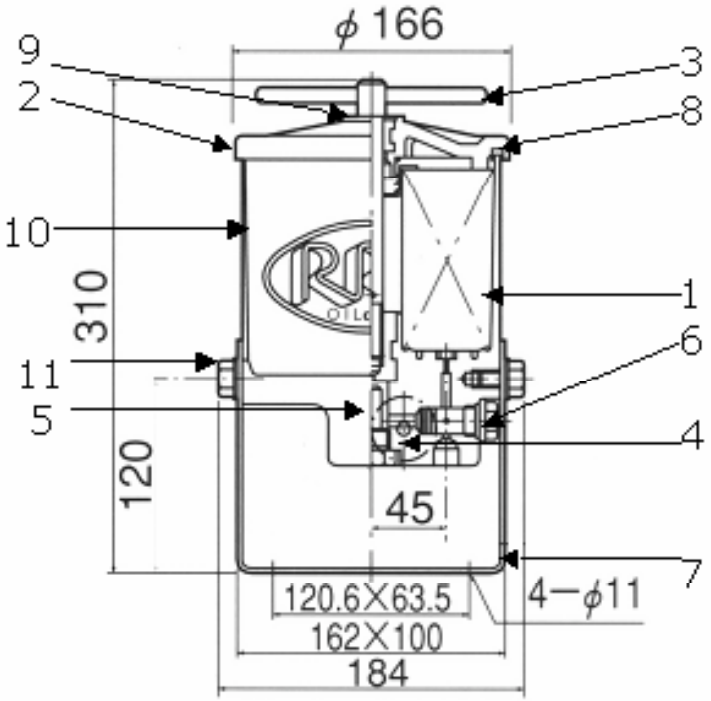

Article number	**TR-19650**
Flow	1,5 lit/min
Thread	BSPT 1/4”
Application	For machines up to max. 500 lit. oil volume
Standard Filter element	M50 (TR-20330)
Option	Pressure switch NC 4,5 bar

Nr.	**Article number**	**Description**
1	TR–20330	Filter element (M50)
2	TR–45432	Lid
3	TR–45330	T-bold
4	TR–49800	Pressure gauge
5	TR–44515	Flow control valve set at 1,5 lit/min
6	TR–41520	Pressure relief valve
7	TR–45165	Bracket
8	TR–44031	O-packing for lid *
9	TR–44112	Bonded seal at T-bold *
10	Triple R Filter housing	
11	TR-45630	Set of bolds

BU100E

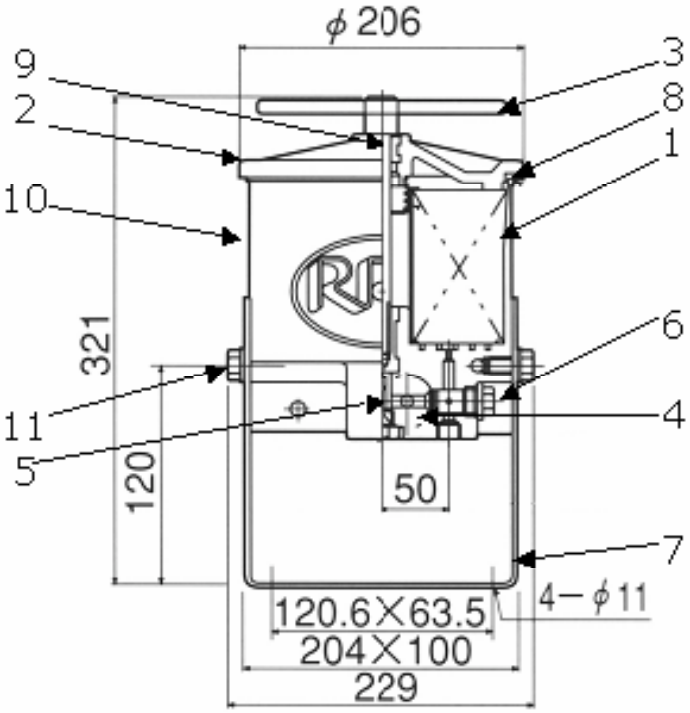

Article number	**TR-19530**
Flow	2,0 lit/min
Thread	BSPT 1/4”
Application	For machines up to max. 1000 lit. oil volume
Standard Filter element	M100 (TR-20430)
Option	Pressure switch NC 4,5 bar

No.	**Article number**	**Description**
1	TR–20430	Filter element (M100)
2	TR–45446	Lid
3	TR–45346	T-bold
4	TR–49800	Pressure gauge
5	TR–44511	Flow control valve set at 2,0 lit/min
6	TR-41520	Pressure relief valve
7	TR–45155	Bracket
8	TR–44046	O-packing for lid *
9	TR–44116	Bonded seal at T-bold *
10	Triple R filter housing	
11	TR–45645	Set of bolds